AEOLOS
wind turbine

Aeolos-H 50KW

Aeolos wind turbine
SINCE 1986

windturbinestar.com

AEOLOS
wind turbine

Aeolos-H 50KW

windturbinestar.com

Turbine

Rated Power	50 kW
Max Power	55 kW
Start Wind Speed	2.5 m/s (5.6 mph)
Rated Wind Speed	9.5m/s (21.25 mph)
Survival Wind Speed	59.5 m/s (133.1 mph)
Design Lifetime	20 years
Overall Weight	6800 kg (14991.4 lbs)

Rotor

Rotor Diameter	18 m (59.1 ft)
Swept Area	254.3 m^2 (2737.3 ft^2)
Rated Rotor Speed	55 rpm
Blade Material	Fiber Glass

Generator

Drive Type	Direct Drive (Without Gearbox)
Generator Type	Permanent Magnet Generator
Generator Voltage	360 VAC/540VDC (Grid-on)
Efficiency	90%

Safety & Brake

Mechnical Pitch Control
Active Yaw Control
Spindle Hydraulic Brakes
Rotor Secure Lock
UPS For Power Lose

Tower

Monopole Tower	24m 30m 36m
Hydraulic Tower	24m 30m

Noise Level

55dBA at 40m

Warranty

Standard Warranty	5 years

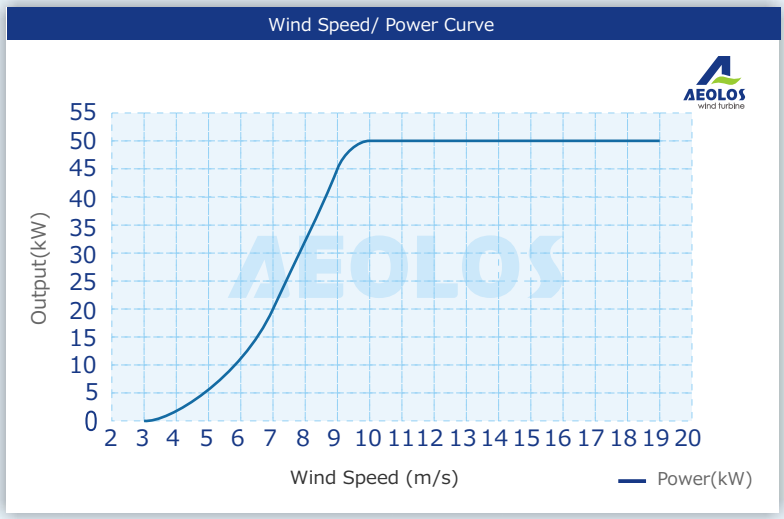

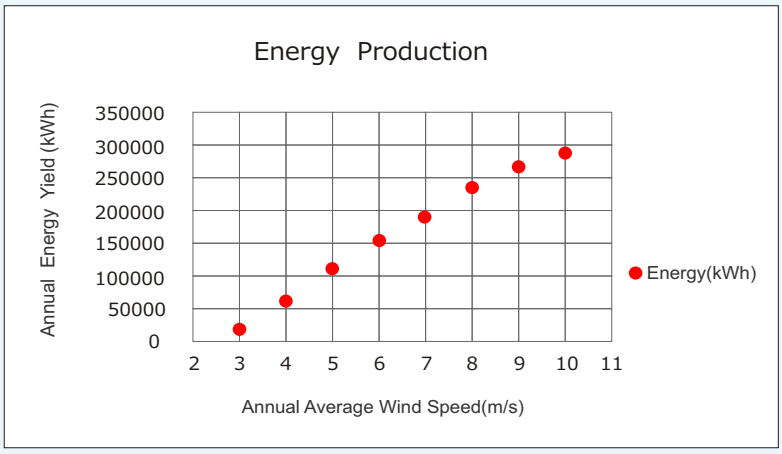

Wind Speed(m/s)	Power Coefficient	Power Output(kW)	Annual Energy Yield(kWh)
3.0	0.13	0.54	20847
3.5	0.14	0.90	36422
4.0	0.20	1.92	56382
4.5	0.28	3.75	79423
5.0	0.32	5.99	103871
5.5	0.35	8.71	128039
6.0	0.37	11.96	152074
6.5	0.39	16.03	174808
7.0	0.40	20.53	197001
7.5	0.41	25.88	216449
8.0	0.42	32.18	234123
8.5	0.42	38.59	250980
9.0	0.42	45.81	265449
9.5	0.39	50.03	275984

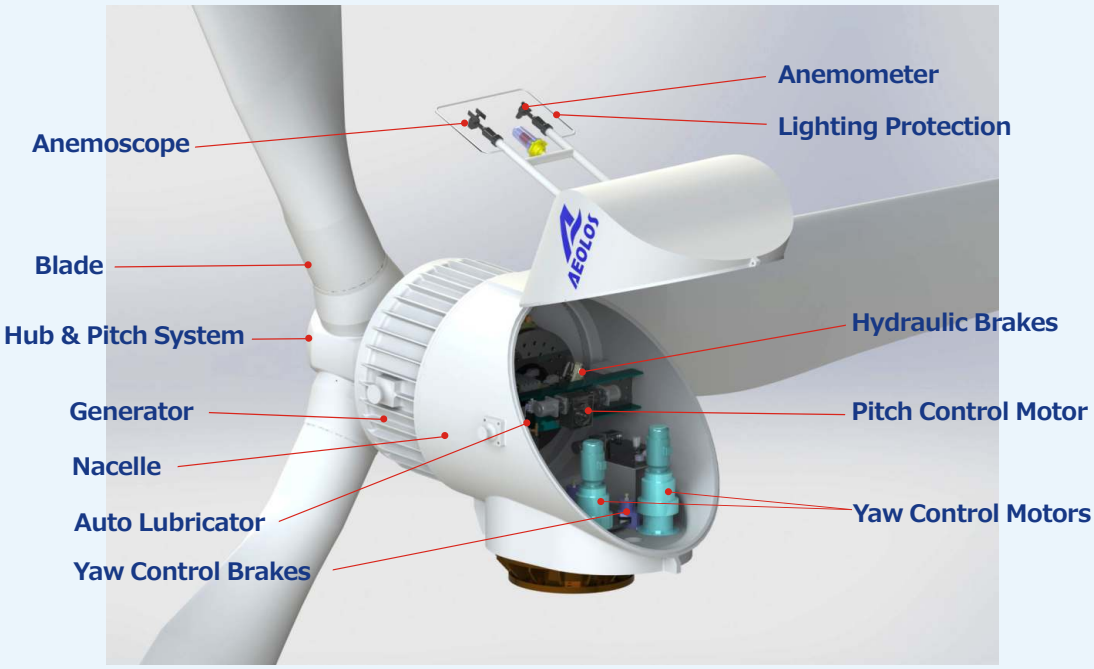

Why Choose AEOLOS-H 50kW Wind Turbine?

Multiple Safety & Brake Protections

Mechanical Pitch Control:
Aeolos intelligent pitch control could change blades angle to ensure more power output at low wind speed and the stable power output in high wind speed. It will protect the wind turbine in over wind speed, over rpm and other faults. Aeolos all pitch control parts in the hub are mechanical parts without electronic parts. It is more reliable than the traditional electronic pitch control system.

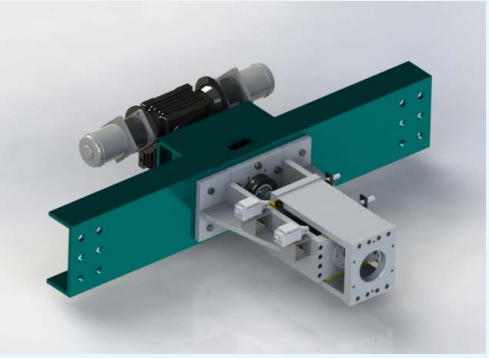

Active Yaw Control:
The active yaw control system will make the wind turbine auto trace the wind direction and auto yaw off the wind direction when there is over wind speed or other faults need to protect wind turbine. It could protect wind turbine even the pitch control system failed.

Two Spindle Hydraulic Brakes:
There are two spindle hydraulic brakes for Aeolos-H 50kw wind turbine. They were driven by high quality hydraulic station. They can stop the wind turbine in any emergency situation even without the pitch control protection and yaw control protection.

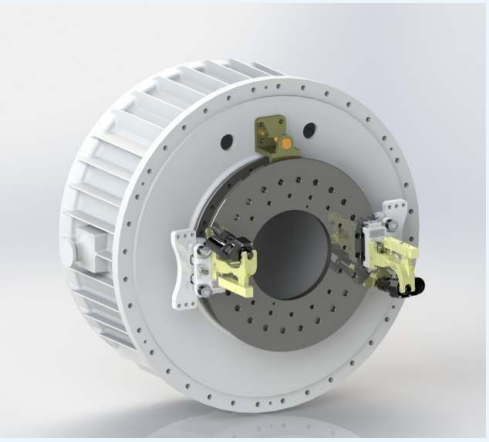

Rotor Secure Lock:
It is the mechanical solution to lock the rotor without electrical or hydraulic brake, especially for the wind turbine installation and maintenance or long term stop working.

5 YEAR WARRANTY

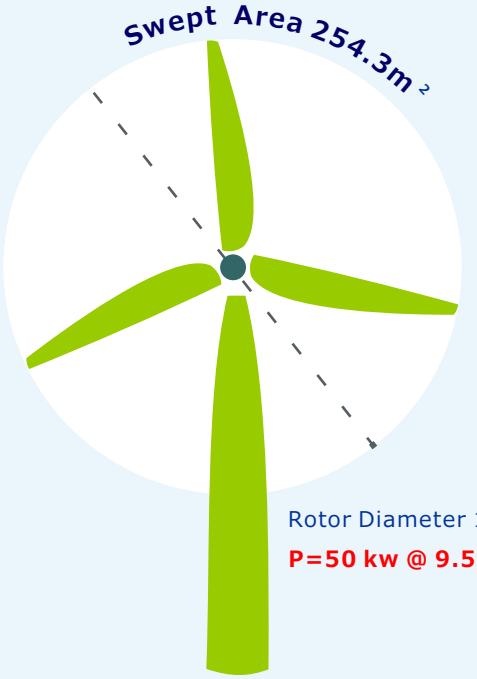

Rotor Diameter 18m

P=50 kw @ 9.5m/s

Annual Energy Yield @ 6 m/s

152074 (KWH)

100kw Dump Load Box:

Aeolos-H 50kw has the PWM dump loading protection for the over voltage fault. A 100kw dump load box will control the peak voltage together with the pitch control system. It will make the power output more stable in gust and high wind speed.

Grid Failure & Power Lose Protection:

When there is grid failure or other reasons leading to the power lose, such as the cable broken, PLC damaged. Our wind turbine can still auto pitch control stop and start the hydraulic brake system. It is the physical self protection in the nacelle.

Double Safety Design:

Aeolos use the double safety design for main functions of wind turbine. There are two pitch control motors, two yaw motors and gear boxes, two spindle hydraulic brakes and two different UPS system in the nacelle. If there is one motor or gearbox damaged, another one could still work well to control the wind turbine.

High Efficiency & Reliable Design

Low Rpm & Direct Drive Generator:

Aeolos 50kw is a directly drive permanent magnet generator without gearbox. It is more reliable and less maintenance than the induction generator. We use the low rpm and larger generator diameter design. It means the higher costs, but better performance on generator efficiency, reliability and over heating problem.

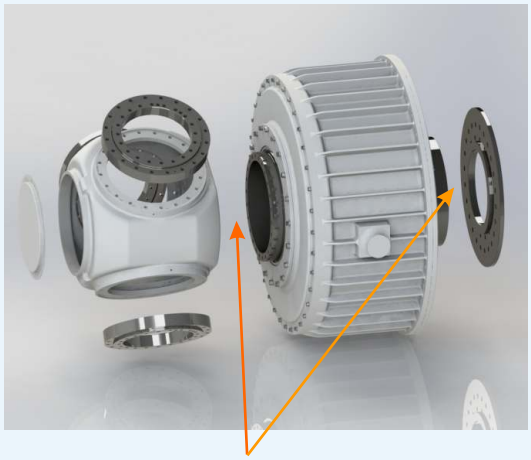

Directly Connection Without Flanges

Direct Connection Design:

The hub directly connected with generator shaft. Generator directly connected with nacelle. Generator shaft directly connected with brake disc. Aeolos optimized design removed the traditional adapter flanges and welding parts. This makes the wind turbine more reliable and more safety.

Larger Rotor & More Power Output:

Aeolos H 50kw has the 18 m rotor diameter .It will reach the 50kw output at 9.5m/s wind speed and there is more power output in low wind speed area. The annual power output is about 152074 kwh at 6 m/s wind speed.

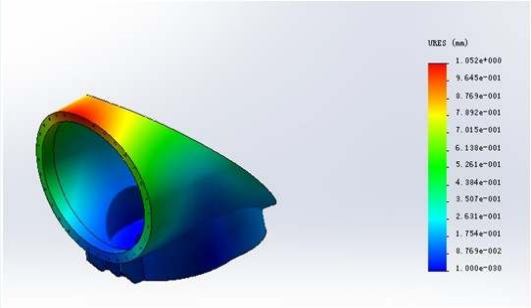

IEC 61400-2 Casting Parts :

Aeolos-H 50kw hub and nacelle are all casting parts followed by IEC 61400 - 2 standard. The nacelle and hub were made by EN-GJS-400-LT which is the same material and technology as MW wind turbines. The lifetime design is more than 20 years and could work from -20℃ to 50℃. It is more reliable than the welding hub and nacelle.

Low Maintenance Cost:

There is auto grease lubricator in the nacelle that will automatically lubricate the yaw bearing, pitch control bearing and other bearings. People could access the nacelle from the tower inside.

5 YEAR WARRANTY

Aeolos -H 50KW

windturbinestar .com

Aeolos Wind Energy ,Ltd (UK)

27 Old Gloucester Street, London WC1N 3AX
United Kingdom
Tel:+44 208 242 1884
E-mail:sales@windturbinestar.com

5 YEAR WARRANTY

Intelligent Control & Remote Monitoring

Aeolos employs Programmable logic controller (PLC) and touch screen as the control system. All the operation data like wind speed and power output can be recorded and customer can easily adjust the protection data of wind speed, voltage, current and rpm through controller.

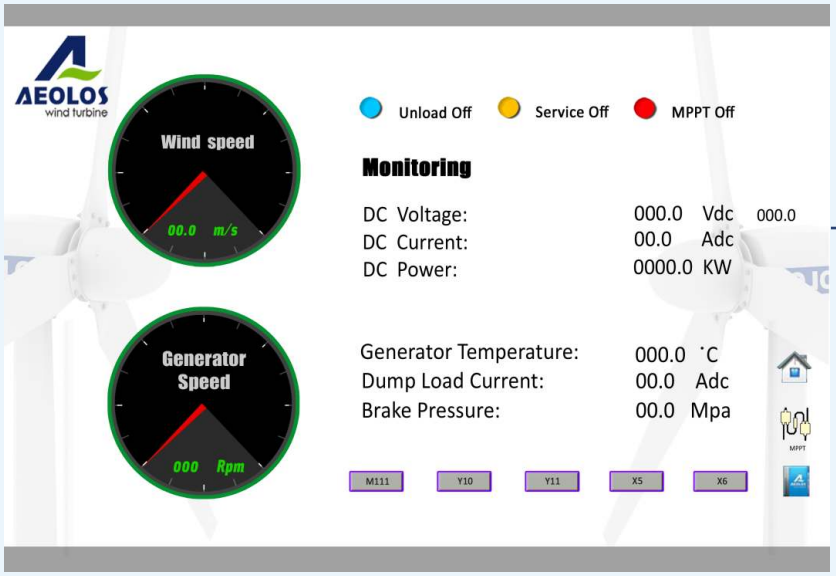

Touch Screen

Aeolos provides remote monitoring function to the customers. You can remotely monitor and control the wind turbine operation through wireless or wire internet in home, office, airport and anywhere.

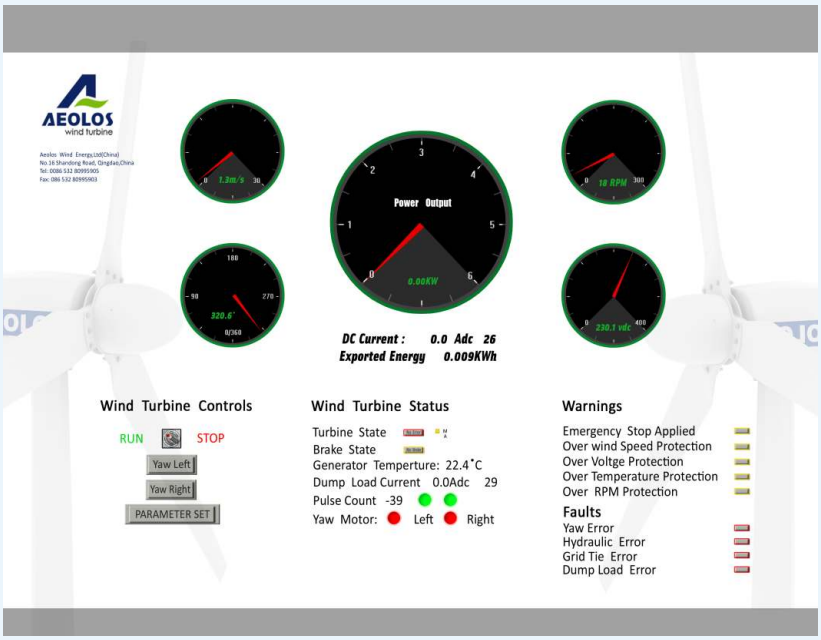

Remote Monitoring Software

5 YEAR WARRANTY

50kW Grid On System Wiring Diagram

Solution I

Aeolos-H 50kW wind turbine could work with ELPOWER Cleanverter 80kw grid on inverter which has the CEI 0-21 certificate to connect ENEL grid.

Solution II

Aeolos-H 50kW wind turbine could match with Power One 2 xTROI-27.6-TL-OUD-W inverters.
Aeolos and Power One engineers did many works in house and onsite to ensure the system matching perfectly.

Aeolos Wind Energy,Ltd (UK)
27 Old Gloucester Street, London WC1N 3AX
United Kingdom
Tel:+44 208 242 1884
E-mail:sales@windturbinestar.com

5 YEAR WARRANTY
AEOLOS wind turbine